DATA SHEET

S-96 - terminal plate

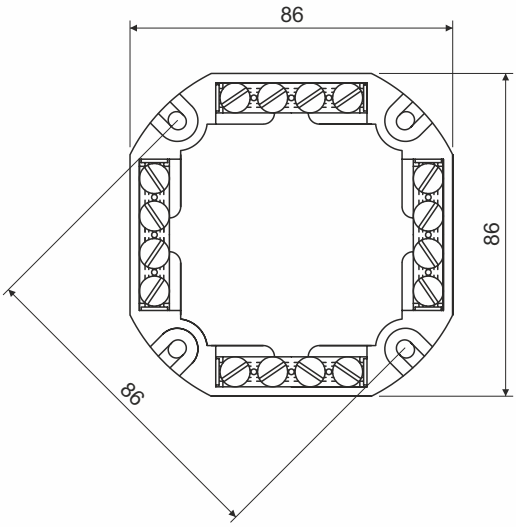

product description:

intended use in distribution boxes with fixing spacing of 86 mm

four separate fields for connecting up to four conductors of up to 4 mm^2 in cross-section

for voltages of up to 500 V

for boxes: KO 97/5, KO 97/L, KR 97/5, KR 97/L, KOM 97, KOM 97HF, KOM 97/LU, KO 100, KO 100 E, KO 110/L, KO 125, KO 125 E, KO 125/1L, KT 250, KT 250/1, KT 250/L, KSK 125, KSK 175, 8110, 8111, 8112, 8117, 8118, 8119, 8135

material: PA (halogen-free)

color: black

self-snuffing: yes, within 30 s

temperature resistance: -30 - +105 °C

flaming loop test: 850 °C

fire class for underlying material: A1-F

weight: 68 g

meets the requirements: EN 60998-1

storage: ČSN 64 0090

S-96_FB - 10 terminal plates packed in a foil, labeled; 120 terminal plates packed in carton

recycling symbols:

7 PA terminal plate | 40 FE screws, clamp strap | 42-49 OSTATNÍ KOVY screws, clamp strap | 4 PE-LD foil | 21 PAP cardboard

WARNING

risks associated with using the products:

incorrect electrical installation can cause a fire - we recommend the connection to be carried out exclusively by an authorized person

follow the manufacturer's installation instructions according to the installation instructions and videos

damage to the product - if the box is visibly damaged, stop using it

make sure the product is properly attached and secured to prevent accidental loosening

under normal and foreseeable conditions of use, the installed product does not pose any risks to consumers